Western Products, PO Box 245038, Milwaukee, WI 53224-9538 • www.westernplows.com

December 1, 2021
Lit. No. 43186, Rev. 05

MIDWEIGHT™, PRO-PLOW® Series 2 & POLY PRO-PLOW® Series 2 Snowplow

Poly Blade Assemblies 72400, 72450, 74330
Steel Blade Assemblies 72308, 72381, 72390, 74340
Center Assembly 75200
Center Assembly, Central Hydraulics 75210

Parts List

A DIVISION OF DOUGLAS DYNAMICS, LLC

TABLE OF CONTENTS

MIDWEIGHT™ BLADE ASSEMBLY 4
PRO-PLOW® Series 2 BLADE ASSEMBLY 6
MIDWEIGHT AND PRO-PLOW Series 2 CENTER ASSEMBLY 8
- Lift Frame and A-Frame Components 8
- Hydraulic Unit Components 10
- Lift and Angle Ram Components 12
- Hoses and Fittings 12
- Electrical Components 13
- Vehicle-Side Harness Diagram – 3-Port, 2-Plug System 14
- Vehicle-Side Harness Diagram – Central Hydraulics 15
- Headlamp Kit 16

Blade Assembly Components

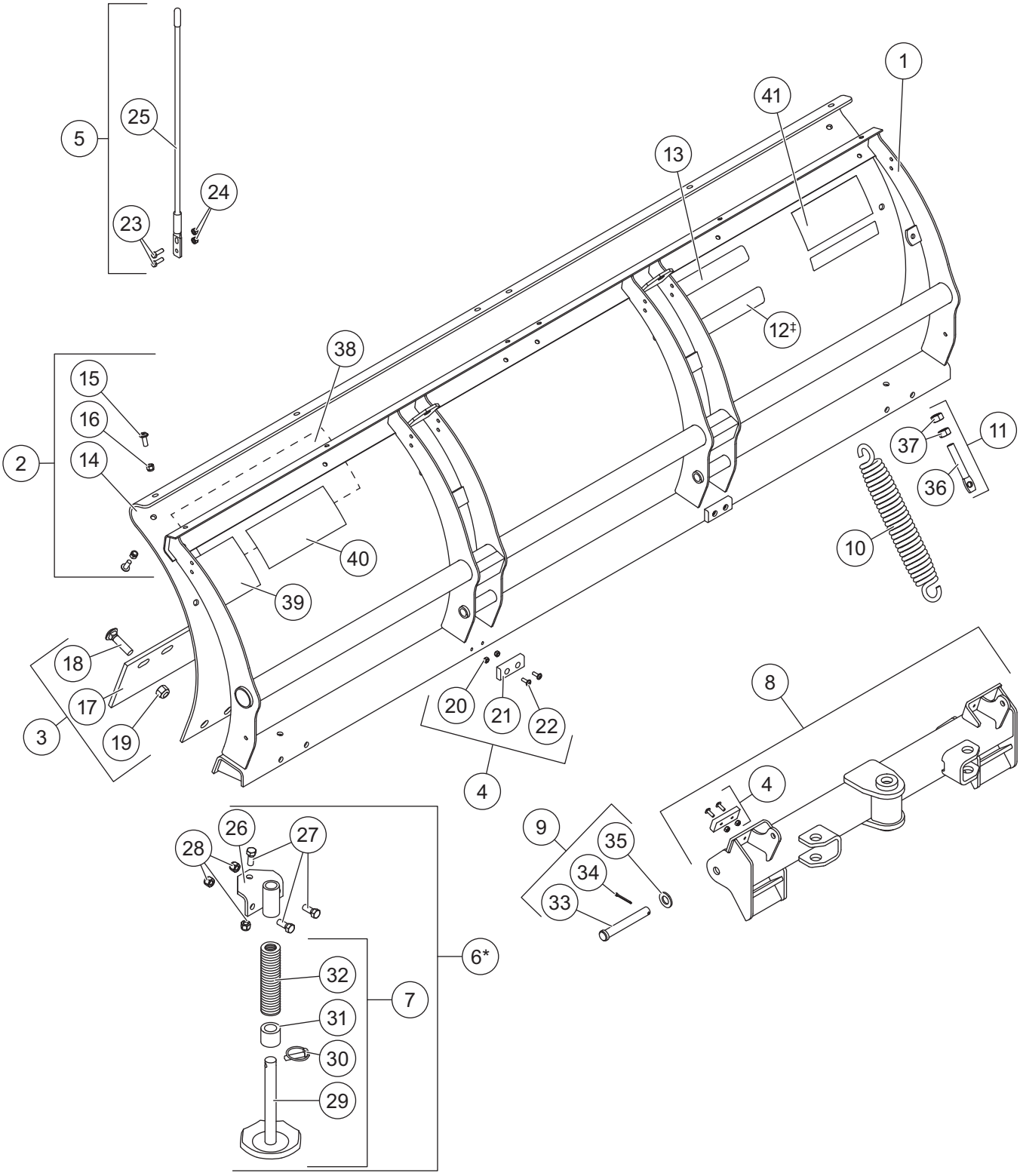

MIDWEIGHT™ BLADE ASSEMBLY 74330/74340

MIDWEIGHT Blade Components							
Item	**Part**	**Qty**	**Description**	**Item**	**Part**	**Qty**	**Description**
1†	64333	1	Blade Frame, 7'6" Poly	8	49531	1	Quadrant, MIDWEIGHT
2†	28597	1	7'6" Poly Moldboard Kit w/Fasteners	9	28593	2	3/4 x 5-3/8 Clevis Pin Kit
ns	64360‡	1	Blade, 7'6" Steel	10	23039	2	Trip Spring
3	28594	1	7'6" Cutting Edge Kit w/Fasteners	11	66421	2	5/8-11 x 4 Eyebolt w/Nuts Kit
4	63976	4	Push Stop Kit	12‡	28404	1	Label – Logo, ULTRAFINISH™
5	62265	1	Blade Guide Kit	13	28598	1	Label – Logo, MIDWEIGHT
6*	64392	2	Shoe Kit	ns	43362	1	Blade Label Kit – UltraMount® 2
7	49067	2	Disc Shoe Assembly				
Item 2†			**28597 7'6" Poly Moldboard Kit w/Fasteners**				
14		1	Moldboard, 7'6" Poly	16	91333	12	3/8-16 Hex Locknut GB
15	98043	12	3/8-16 x 1 Button Cap Screw				
Item 3			**28594 7'6" Cutting Edge Kit w/Fasteners**				
17	64760	1	7'6" Cutting Edge	19	91337	10	5/8-11 Hex Locknut GB
18	5572	10	5/8-11 x 2 Carriage Bolt G5				
Item 4			**63976 Push Stop Kit**				
20		2	1/4-20 Hex Jam Locknut GB	22		2	1/4-20 x 3/4 Button Cap Screw
21		1	Bumper				
Item 5			**62265 Blade Guide Kit**				
23	68494	4	5/16-18 x 1 Hex Cap Screw G5	25	62263	2	Blade Guide, Poly
24	91332	4	5/16-18 Hex Locknut GB				
Item 6*			**64392 Shoe Kit**				
7	49067	2	Disc Shoe Assembly	27	90575	6	1/2-13 x 1-1/4 Hex Cap Screw G5
26	64388	2	Shoe Bracket	28	91335	6	1/2-13 Hex Locknut GB
Item 7			**49067 Disc Shoe Assembly**				
29		1	Disc Shoe	31	60045	1	Spacer
30		1	7/16 x 1-3/4 Linchpin	32	91192	26	Round Flat Washer, Special
Item 9			**28593 3/4 x 5-3/8 Clevis Pin Kit**				
33		1	3/4 x 5-3/8 Clevis Pin	35	91147	1	3/4 Flat Washer
34	91911	1	5/32 x 1-1/2 Cotter Pin				
Item 11			**66421 5/8-11 x 4 Eyebolt w/Nuts Kit**				
36	90490	1	5/8-11 x 4 Eyebolt	37	91416	2	5/8-11 Hex Nut GB
			43362 Blade Label Kit – UltraMount 2				
38	69489	1	Label – Logo, WESTERN®	40	43360	1	Label – Attach/Detach, UltraMount 2
39	59900	1	Label – Warning/Caution, Snowplow	41	44451	1	Label – Logo, WESTERN 8.31"
			ns = not shown				G = Grade

* Accessory only.
† Poly blades only.
‡ Steel blades only.

Blade Assembly Components

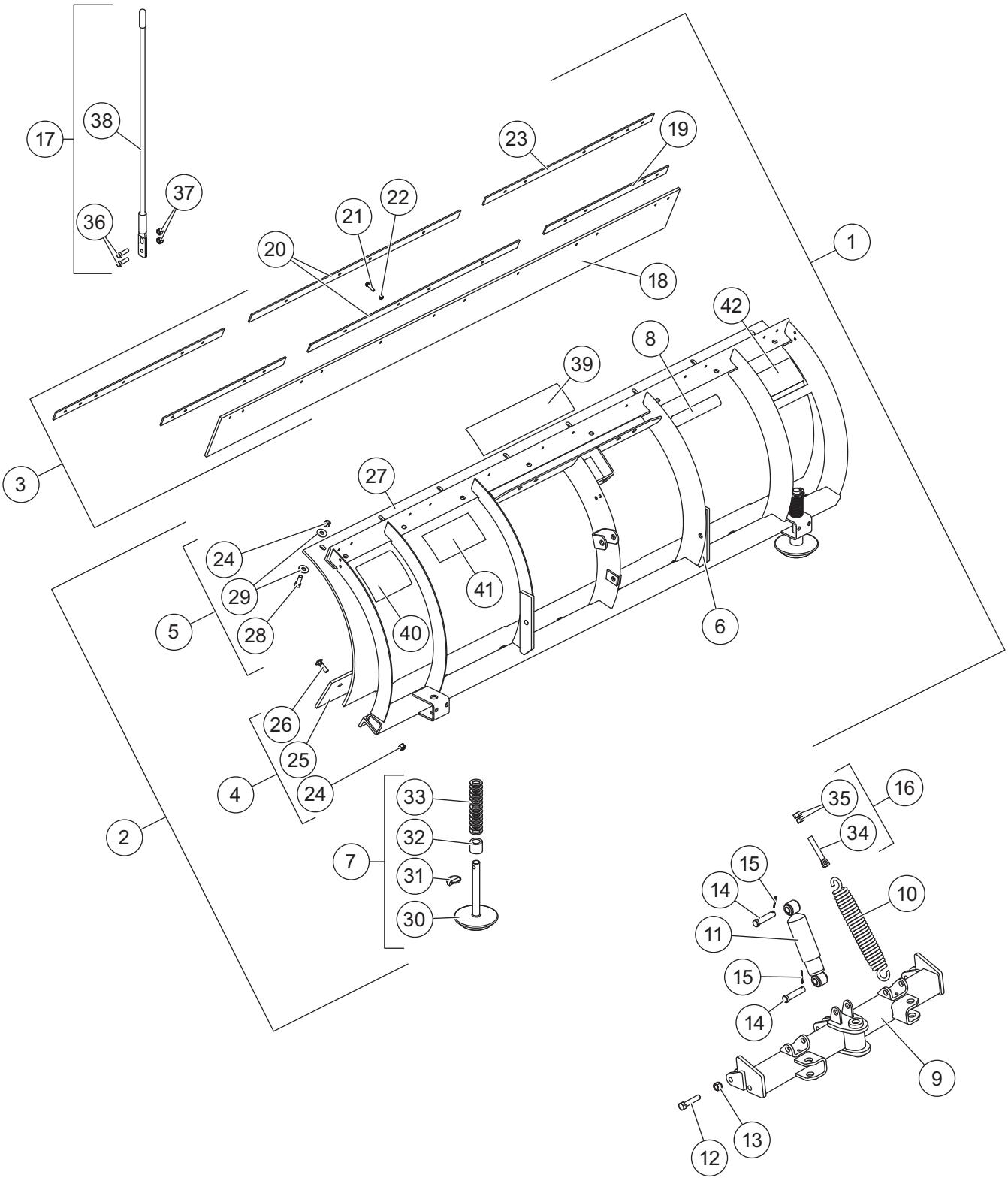

PRO-PLOW® Series 2 and POLY PRO-PLOW® Series 2 Blade Assembly Components							
Item	**Part**	**Qty**	**Description**	**Item**	**Part**	**Qty**	**Description**
1	62400†	1	7'6" Blade Assy w/Deflector – Poly	6	62350†	1	7'6" Blade Frame
	62450†	1	8' Blade Assembly w/Deflector– Poly		62415†	1	8' Blade Frame
2	62395†	1	7'6" Blade Assembly – Poly	7	49071	2	Disc Shoe Assembly
	62420†	1	8' Blade Assembly – Poly	8	28404‡	1	Label – Logo, ULTRAFINISH™
ns	60381‡	1	7'6" Blade Assembly – Steel	9	68290	1	Quadrant, PRO-PLOW Series 2
	60390‡	1	8' Blade Assembly – Steel	10	23039	4	Trip Spring
	60308‡	1	8'6" Blade Assembly – Steel	11	63979	1	Shock Absorber Assembly
3	62396†	1	7'6" Rubber Deflector Assembly	12	90132	2	5/8-11 x 3 Hex Cap Screw G5
	62402†	1	8' Rubber Deflector Assembly	13	91337	2	5/8-11 Hex Locknut GB
4	49312†	1	7'6" Cutting Edge Assembly – Poly	14	93063	2	3/4 x 3-1/4 Clevis Pin
	49328†	1	8' Cutting Edge Assembly – Poly	15	91911	2	5/32 x 1-1/2 Cotter Pin
	49088‡	1	7'6" Cutting Edge Assembly – Steel	16	66421	4	5/8-11 x 4 Eyebolt w/Nuts Kit
	49089‡	1	8' Cutting Edge Assembly – Steel	ns	43362	1	Blade Label Kit – UltraMount® 2
	49086‡	1	8'6" Cutting Edge Assembly – Steel	17	62265	1	Blade Guide Kit
5	49322†	1	7'6" Moldboard Kit				
	49327†	1	8' Moldboard Kit				
Item 2			**62395 or 62420 Blade Assembly**				
4†		1	Cutting Edge Assembly	6		1	Blade Frame
5†		1	Moldboard Kit	7	49071	2	Disc Shoe Assembly
Item 3†			**62396 7'6" Rubber Deflector Assembly**				
18		1	7'6" Rubber Deflector	21	90048	12	5/16-18 x 1-1/4 Hex Cap Screw G5
19	64803	2	7'6" Retainer, Outer	22	91332	12	5/16-18 Hex Locknut GB
20	64802	1	Retainer, Inner				
Item 3†			**62402 8' Rubber Deflector Assembly**				
ns		1	8' Rubber Deflector	22	91332	12	5/16-18 Hex Locknut GB
20	64802	1	Retainer, Inner	23	64801	2	8'–9' Retainer, Outer
21	90048	12	5/16-18 x 1-1/4 Hex Cap Screw G5				
Item 4			**49312, 49328, 49088, 49089, or 49086 Cutting Edge Assembly**				
24	91335	8	1/2-13 Hex Locknut GB	26	90238	8	1/2-13 x 1-3/4 Carriage Bolt G8
25		1	Cutting Edge				
Item 5†			**49322 or 49327 Moldboard Kit**				
24	91335	8	1/2-13 Hex Locknut GB	28	90101	8	1/2-13 x 1-3/4 Hex Cap Screw G5
27		1	Plastic Moldboard	29	91105	16	1/2 Flat Washer, Type A Wide
Item 7			**49071 Disc Shoe Assembly**				
30		1	Disc Shoe	32	60045	1	Spacer
31		1	7/16 x 1-3/4 Linchpin	33	91192	26	1" Flat Washer, Special
Item 16			**66421 5/8-11 x 4 Eyebolt w/Nuts Kit**				
34	90490	1	5/8-11 x 4 Eyebolt	35	91416	2	5/8-11 Hex Nut GB
Item 17			**62265 Blade Guide Kit**				
36	68494	4	5/16-18 x 1 Hex Cap Screw G5	38	62263	2	Blade Guide, Poly
37	91332	4	5/16-18 Hex Locknut GB				
43362 Blade Label Kit – UltraMount 2							
39	69489	1	Label – Logo, WESTERN®	41	43360	1	Label – Attach/Detach, UltraMount 2
40	59900	1	Label – Warning/Caution, Snowplow	42	44451	1	Label – Logo, WESTERN 8.31"
ns = not shown				G = Grade			

† Poly blades only.
‡ Steel blades only.

Lift Frame and A-Frame Components

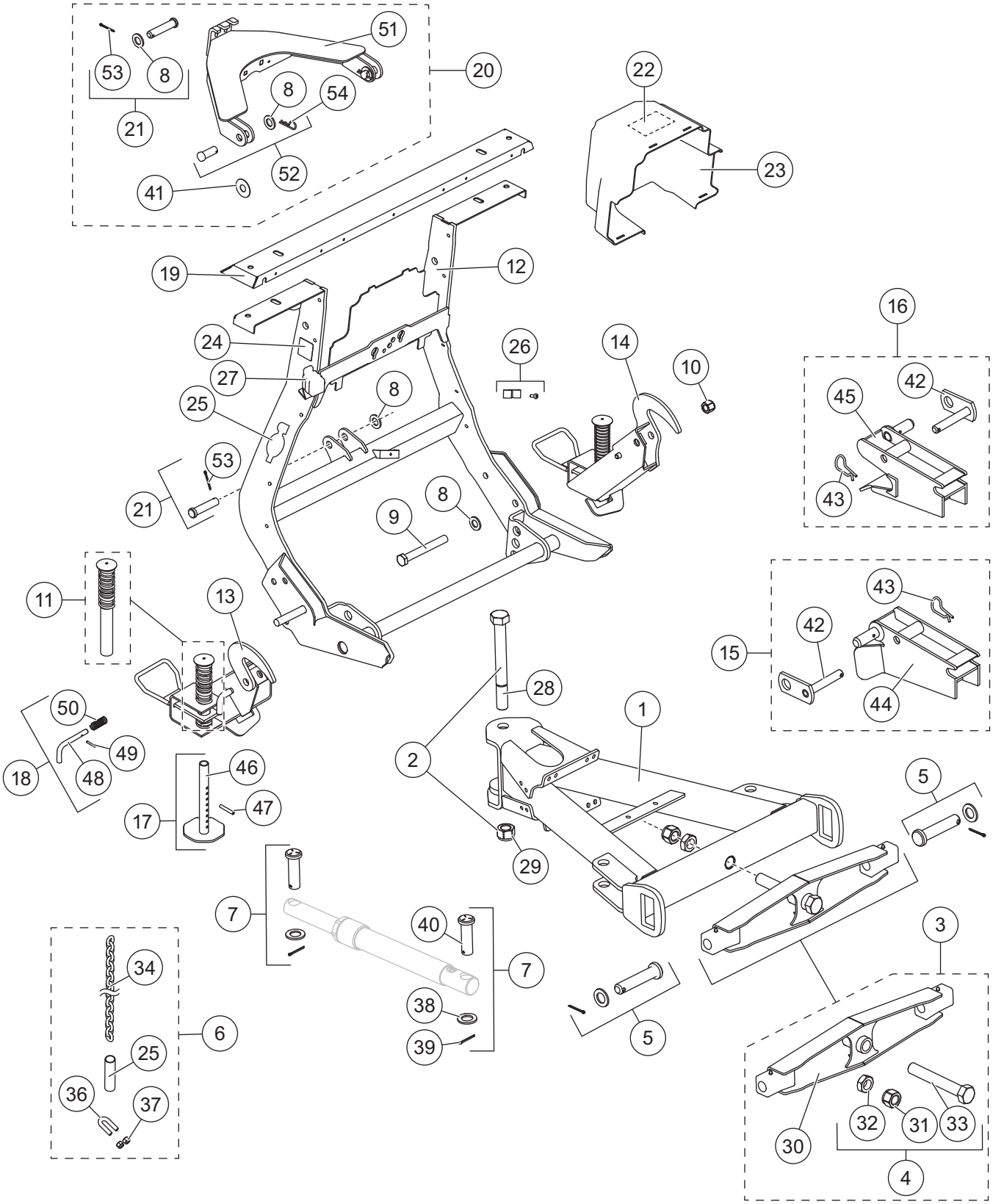

MIDWEIGHT and PRO-PLOW Series 2 Lift Frame and A-Frame Components							
Item	**Part**	**Qty**	**Description**	**Item**	**Part**	**Qty**	**Description**
1	68291	1	A-Frame	15	76722	1	Receiver Kit – DS
2	69494	1	Nose Plate Bolt Kit	16	76718	1	Receiver Kit – PS
3	67842-1	1	Pivot Bar Kit	17	67847	2	Stand Shoe Kit
4	67855	1	Pivot Bolt Kit	18	67844	2	Stand Lock Pin Kit
5	49645	2	Pivot Bar Pin Kit	19	43302	1	Light Channel
6	49033	2	1/4 Grade 43 Chain Assembly	20	43304	1	Lift Arm Kit
7	63973	4	Ram Pin Kit	21	68740	2	3/4 x 3-1/2 Clevis Pin Kit
8	91147	6	3/4 Flat Washer	22	43353	1	Label – Information, Straight Blade Hydraulic
9	66451	2	3/4-10 x 6 Hex Cap Screw G5				
10	91338	2	3/4-10 Hex Locknut GB	23†	68314-1	1	Hydraulic Unit Cover (incl. item 22)
11	48523	2	Plunger w/Spring	24†	69689	1	Label – Logo, SECURITY GUARD™
12	78790	1	Lift Frame Kit	25	43358	2	Label – Logo, UltraMount® 2
13	72618	1	Stand Assembly – DS	26	49479-1	1	Hose Bracket Kit
14	72617	1	Stand Assembly – PS	27	61246	1	Cable Boot
Item 2			**69494 Nose Plate Bolt Kit**				
28		1	1-8 x 9 Hex Cap Screw G8	29		1	1-8 Hex Locknut GB
Item 3			**67842-1 Pivot Bar Kit**				
4	67855	1	Pivot Bolt Kit	30		1	Pivot Bar
Item 4			**67855 Pivot Bolt Kit**				
31		1	1-8 Hex Locknut GB	33	67552	1	1-8 x 7 Hex Cap Screw G5
32	67748	1	1-8 Hex Jam Nut G5				
Item 6			**49033 1/4 Grade 43 Chain Assembly**				
34		1	1/4 x 42 Grade 43 Chain	36	90453	1	3/8-16 x 1-1/2 U-Bolt G5
35		1	Plastic Tube	37	91333	2	3/8-16 Hex Locknut GB
Item 7			**63973 Ram Pin Kit**				
38	91192	1	Round Flat Washer, Special	40	93074	1	1 x 3-1/4 Clevis Pin
39	91911K	1	5/32 x 1-1/2 Cotter Pin Kit (pkg of 4)				
Item 12			**78790 Lift Frame Kit**				
		1	Lift Frame	25	43358	2	Label – Logo, UltraMount 2
24†	69689	1	Label – Logo, SECURITY GUARD	41		2	UHMW Round Flat Washer, Special
Item 15			**76722 Receiver Kit – DS**				
42	42498	1	Pin, Receiver	44		1	Receiver – DS
43	91965K-1	1	5/32 Hairpin Cotter				
Item 16			**76718 Receiver Kit – PS**				
42	42498	1	Pin, Receiver	45		1	Receiver – PS
43	91965K-1	1	5/32 Hairpin Cotter				
Item 17			**67847 Stand Shoe Kit**				
46		1	Stand Shoe	47	67635	1	1/4 x 2 Roll Pin
Item 18			**67844 Stand Lock Pin Kit**				
48		1	Lock Pin	50	67726	1	Spring Lock Pin
49	67700	1	3/16 x 1-1/4 Roll Pin				
Item 20			**43304 Lift Arm Kit**				
21	68740	1	3/4 x 3-1/2 Clevis Pin Kit	51		1	Lift Arm
41		2	UHMW Round Flat Washer, Special	52	43351	2	3/4 x 2 Clevis Pin Kit
Item 21			**68740 3/4 x 3-1/2 Clevis Pin Kit**				
8	91147	1	3/4 Flat Washer	53	91911K	1	5/32 x 1-1/2 Cotter Pin Kit (pkg of 4)
Item 52			**43351 3/4 x 2 Clevis Pin Kit**				
		1	3/4 x 2 Pin	54	91962	1	1/8 Hairpin Cotter
8	91147	1	3/4 Flat Washer				
G = Grade							

† Not used for central hydraulics.

Hydraulic Unit Components

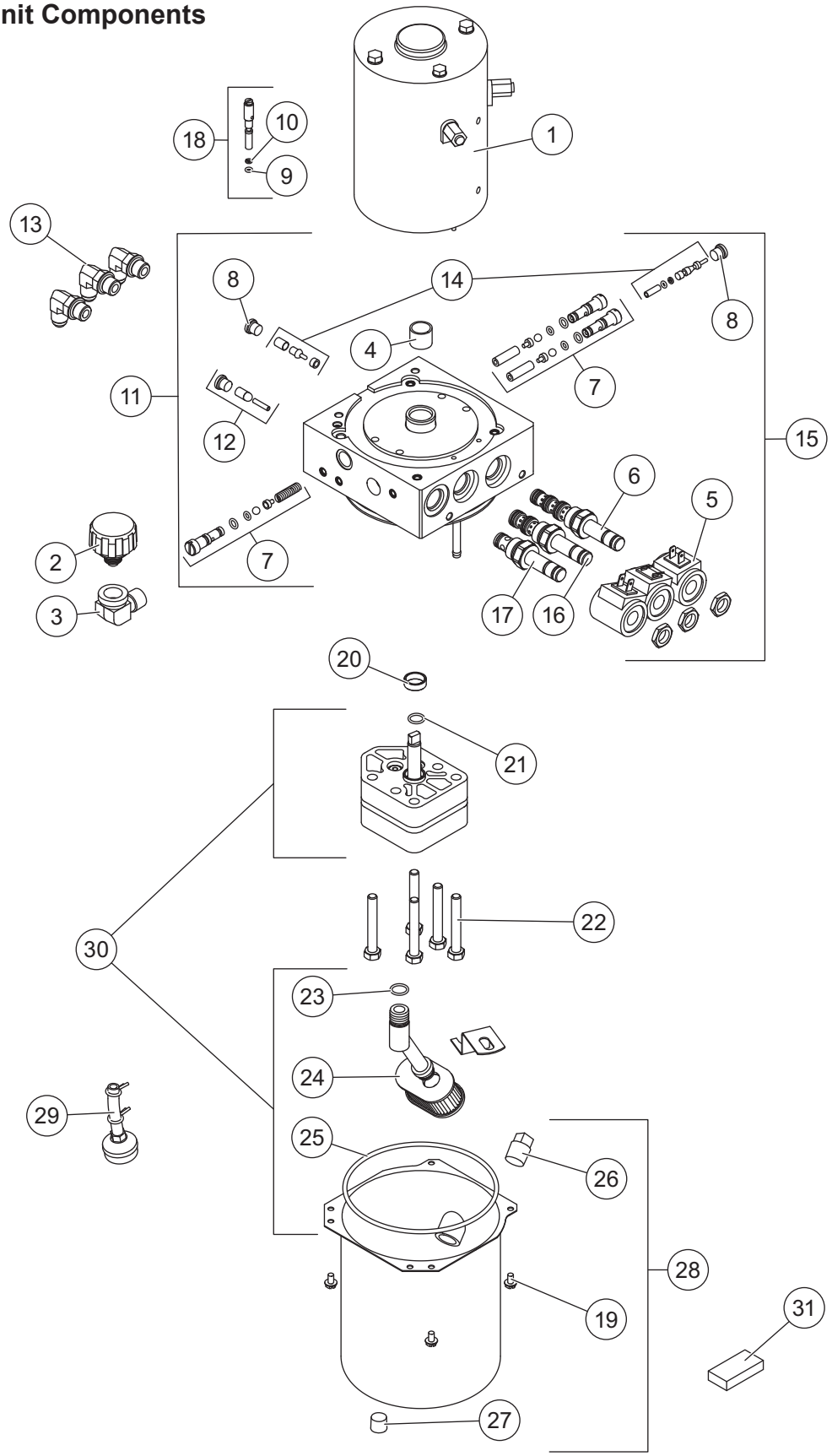

42345-1 Hydraulic Unit
42348-1* Hydraulic Unit Service Kit
(not used for central hydraulics)

Item	Part	Qty	Description	Item	Part	Qty	Description
1	21500-1	1	Motor, 4-1/2	17	49227K-2	1	Valve, 2-Way w/Nut
2	21727-2K	1	Breather Pressure Control	18	56662	1	Quill Assembly
3	21726K	1	Elbow, Street, 90° 3/8 M NPTF/ 3/8 F NPTF	19	66607	4	#10-24 x 5/16 Slotted Hex Washer-Head Machine Screw
4**	64596-1	1	Sleeve Bearing & Shaft Seal Kit	20†	66515	1	Pump Shaft Seal
5	49230K-2	3	Coil w/Spades	21	56274	1	O-Ring -013
6	49229K-1	1	Cartridge Valve, 4-Way w/Nut	22	90073	5	5/16-18 x 2-1/4 Hex Cap Screw
7	49138K-5	1	Relief Valve Kit (2 sets)	23	56416	1	O-Ring -014
8	92960	2	Plug, Hex Socket –3 M ORB	24	56789-5	1	Suction Filter
9	25622	1	O-Ring -006	25	66519	1	O-Ring 2-250
10	56315	1	Back-Up Ring -006	26	92079	1	Plug, Square 3/8 NPTF
11	42346-2	1	Manifold Assembly	27	92095	1	Plug, Hex Socket 1/4 NPTF Thread Sealant – SAE 130109N/P
12	56507	1	Bypass Check Valve Kit				
13	77929	3	Elbow, 90° –6 M JIC/–6 M ORB w/Screen	28	21830	1	Reservoir Kit
				29	66405	1	Return Screen Assembly
14	49226K	1	Poppet Check Valve Kit	30	21501-1	1	Hydraulic Pump Kit
15	42347-2	1	Valve Manifold Assembly	31	73897	1	Magnet
16	66608-1	1	Cartridge Valve, 3-Way w/Nut				
O-Ring Service Kits							
–	56657-6	–	O-Ring & Back-Up Ring Kit	–	49259-2	–	Seal Kit, 3-Way & 4-Way Valve
–	49258-2	–	Seal Kit, 2-Way Valve				
F = Female				M = Male			

* Includes 42345-1 hydraulic unit and plow-side electrical components (p. 13).

** Use 64589 tool for bearing sleeve replacement (includes 1 bearing).

† Use 28856 tool for pump shaft seal replacement (includes 1 seal).

Lift and Angle Ram Components

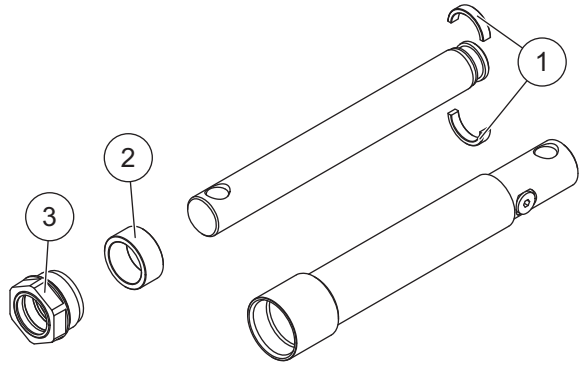

56538K Lift Ram Assembly 1-1/2 x 8			
Item	**Part**	**Qty**	**Description**
1	64650	1	Split Bearing Kit 1-1/2
2	56537	1	Spacer
3	48985	1	Gland Nut Assembly

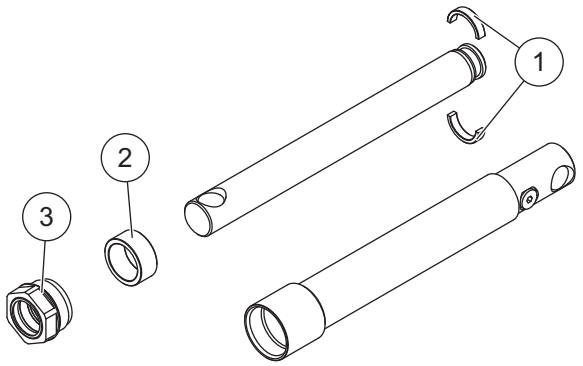

64706K Angle Ram Assembly 1-1/2 x 10			
Item	**Part**	**Qty**	**Description**
1	64650	1	Split Bearing Kit 1-1/2
2	56537	1	Spacer
3	48985	1	Gland Nut Assembly

Hoses and Fittings

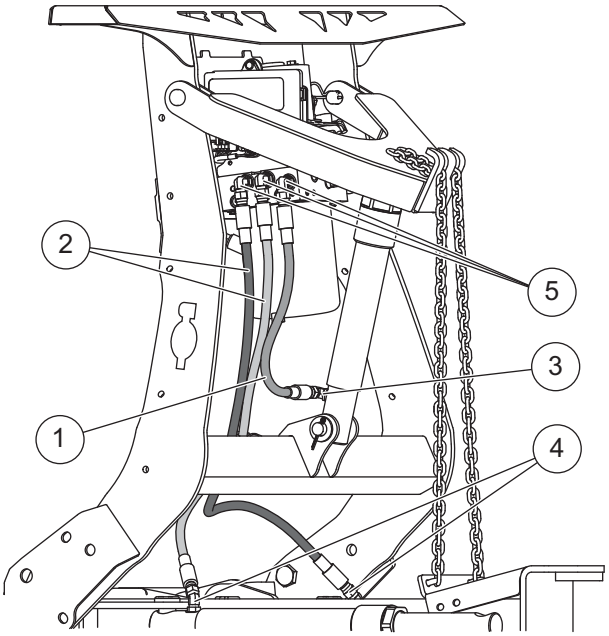

Hoses and Fittings							
Item	**Part**	**Qty**	**Description**	**Item**	**Part**	**Qty**	**Description**
1‡	41094	1	Hose, 1/4 x 18 w/F JIC Ends	4	26694	2	Elbow, 45° –6 M JIC/–6 M ORB
2‡	49532	2	Hose, 3/8 x 36 w/F JIC Ends	5	77929	3	Elbow, 90° –6 M JIC/–6 M ORB w/Screen
3	56615-1	1	Elbow, 90° –6 M JIC/–6 M ORB				
F = Female				M = Male			

‡ Not used for central hydraulics.

Electrical Components

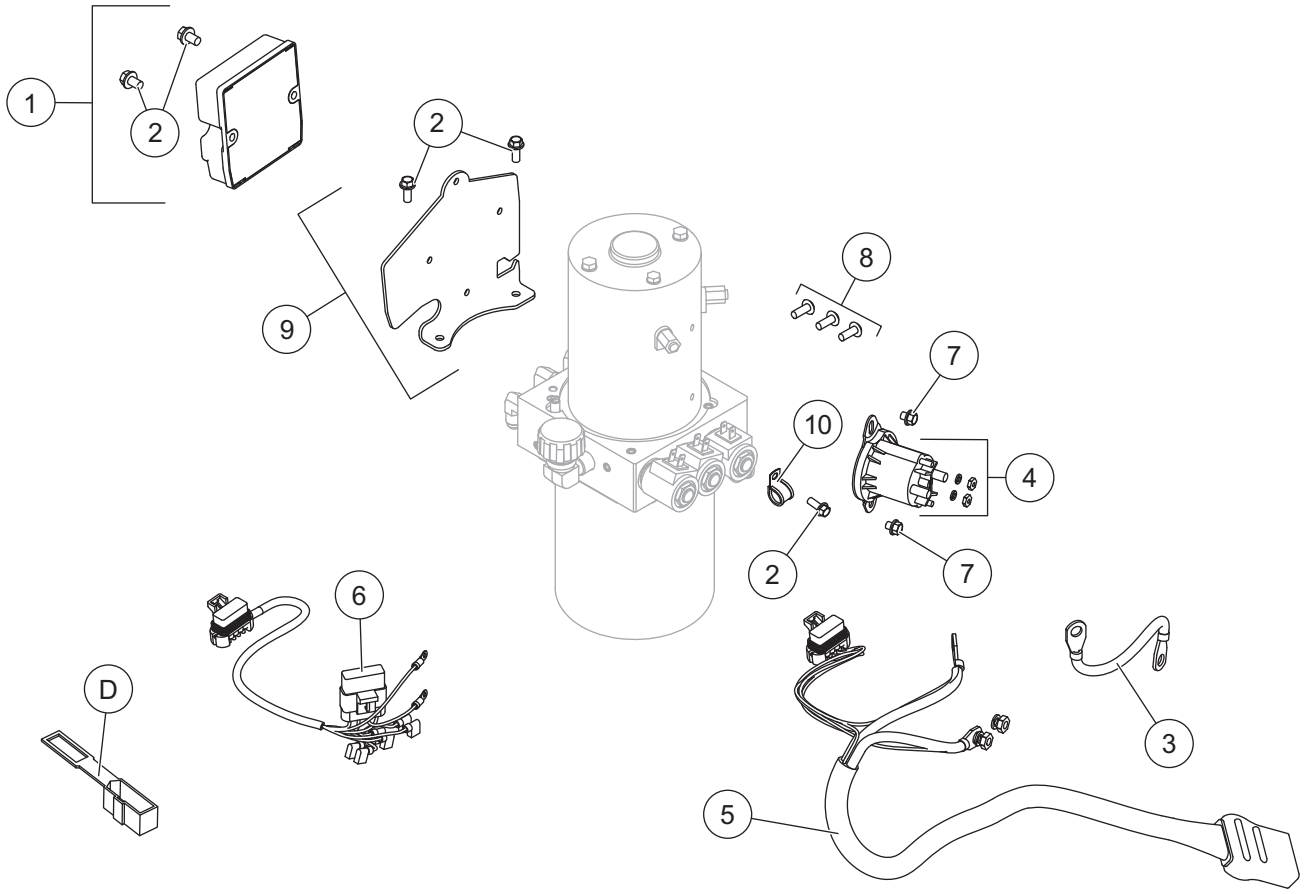

Plow-Side Electrical Components							
Item	**Part**	**Qty**	**Description**	**Item**	**Part**	**Qty**	**Description**
1	49567	1	Plow Module, 2-Port	7	29099	2	1/4-20 x 1/4 Hex Washer-Head Thread-Rolling Screw
2	44355	5	1/4-20 x 5/8 Hex Washer-Head Thread-Rolling Screw	8	98043	3	3/8-16 x 1 Button Cap Screw
3	29071	1	Cable Assembly 8"	9	42287	1	Bracket – Plow Module
4	42902	1	Motor Relay Kit FLEET FLEX System	10	65340	1	Clamp Loop #10
5	42015	1	Snowplow Battery Cable	ns	56099	1	Dielectric Grease
6	28581-1	1	Harness, Plow Control, 3-Solenoid				
ns = not shown							

Vehicle-Side Electrical Components (diagrams on following pages)							
A*†	28587	1	Vehicle Control Harness	D	61548K	1	Plug Cover Kit (shown with plow-side electrical components)
B*†	72527	1	Vehicle Battery Cable				
C**	26498	1	Vehicle Control Harness – Central Hydraulics	E	29998	1	Fuse Cover (pkg of 5)

* For diagram, see Vehicle-Side Harness Diagram – 3-Port, 2-Plug System.

** For diagram, see Vehicle-Side Harness Diagram – Central Hydraulics.

† Not used for central hydraulics.

Vehicle-Side Harness Diagram
3-Port, 2-Plug System

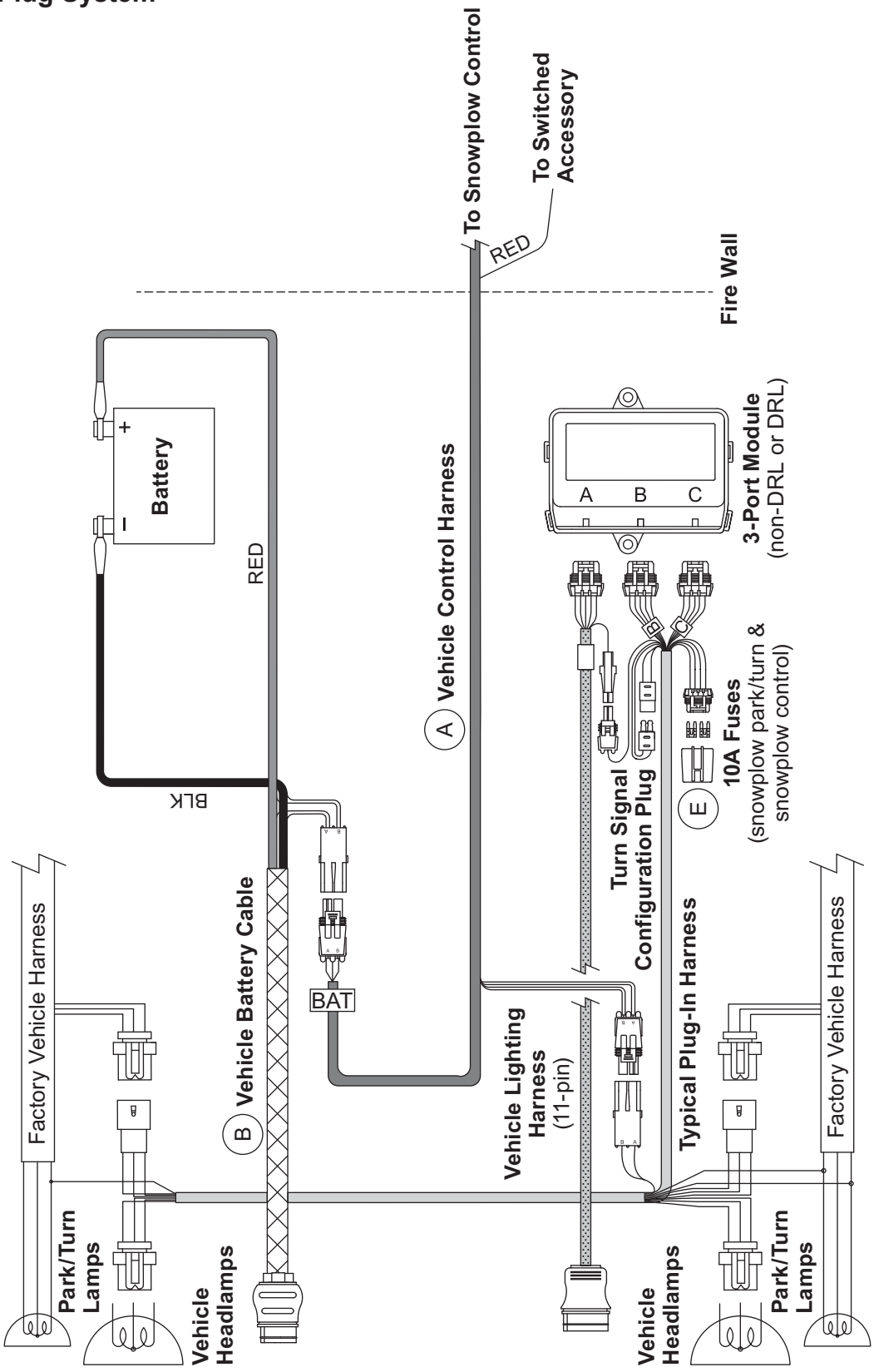

Vehicle-Side Harness Diagram
Central Hydraulics

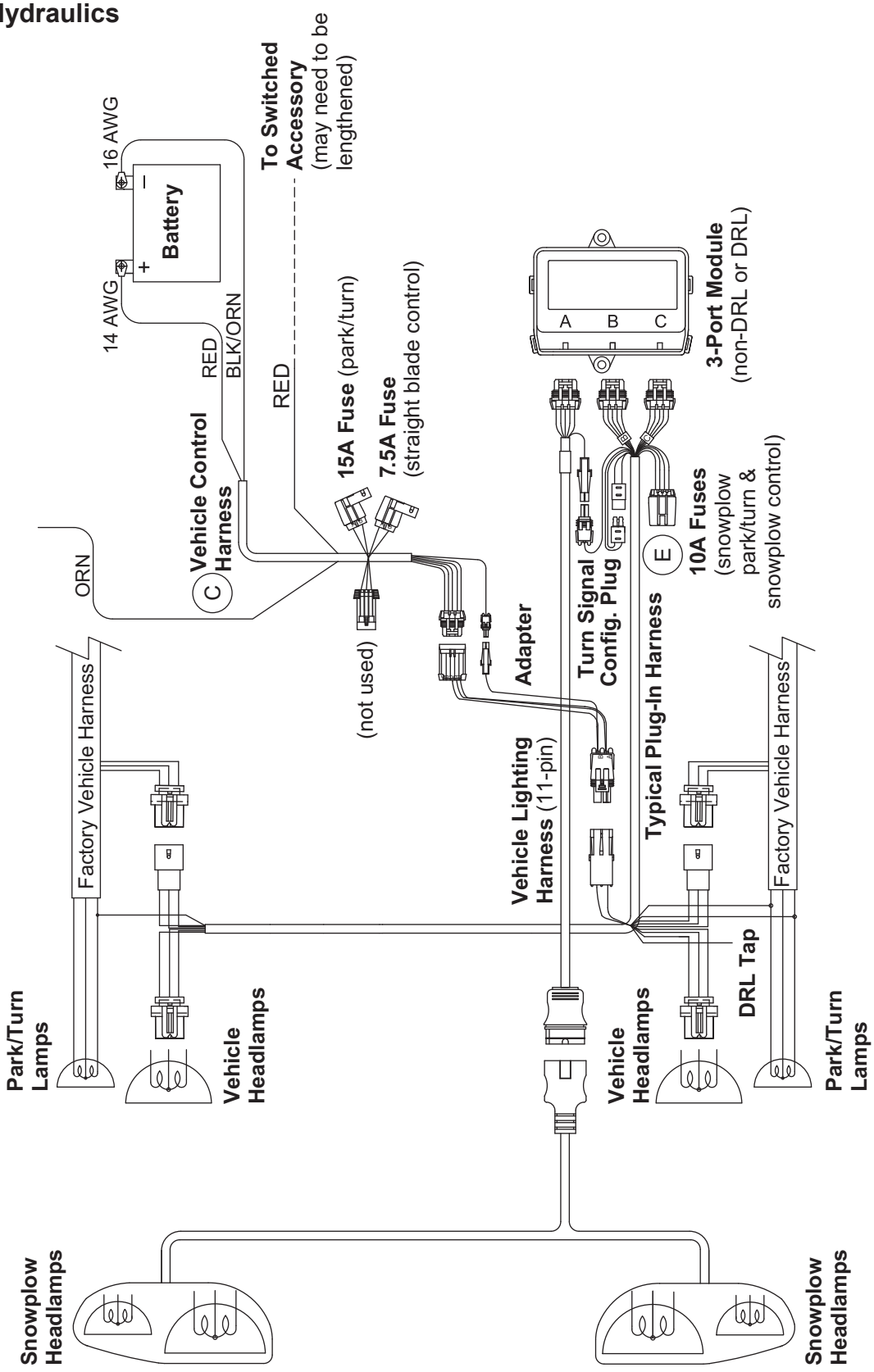

Headlamp Kit

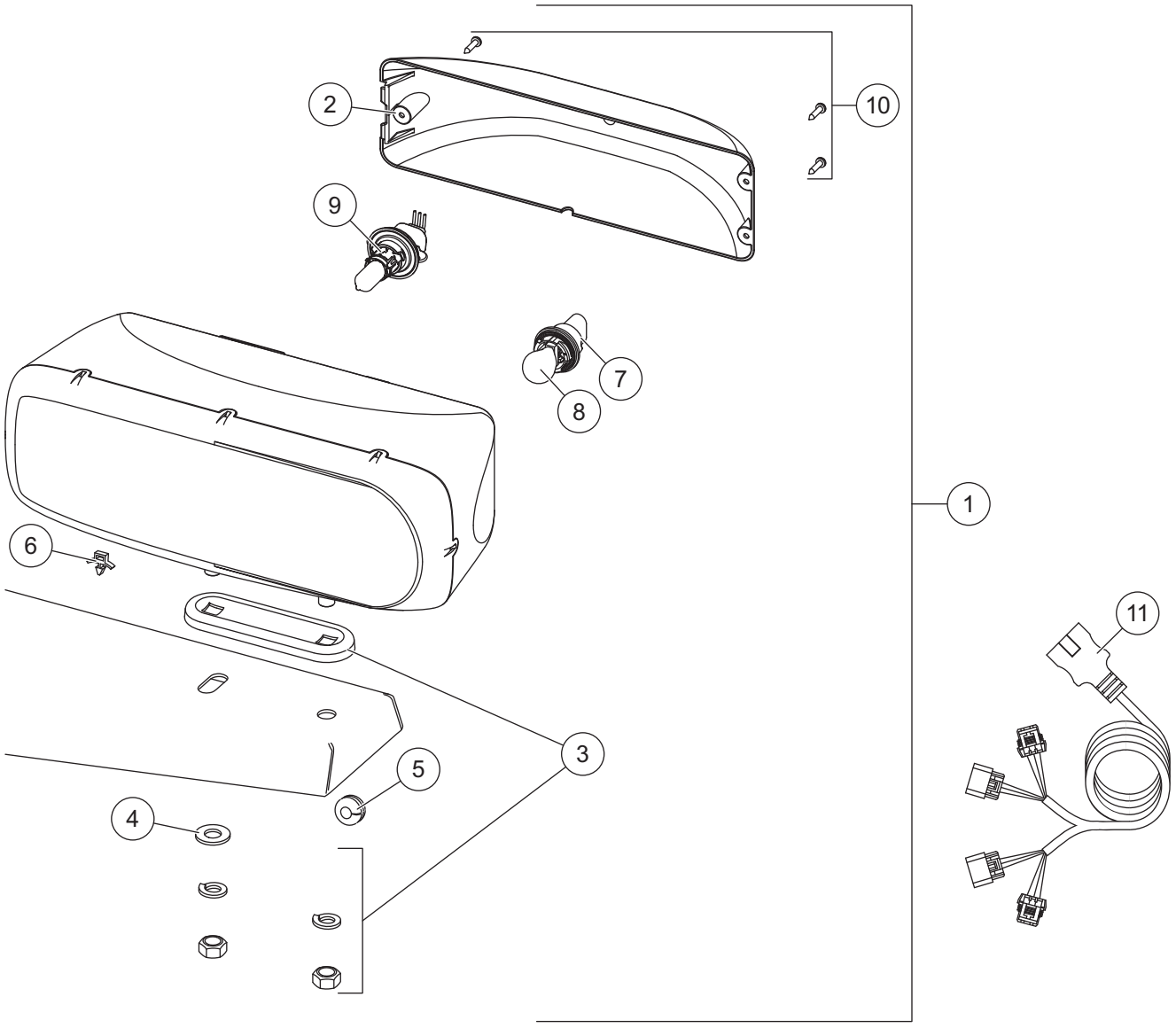

28800-1 Headlamp Kit (pair)							
Item	**Part**	**Qty**	**Description**	**Item**	**Part**	**Qty**	**Description**
1	28801-1	1	Headlamp Service Kit – DS	6	56595	7	Cable Tie Anchor
ns	28802-1	1	Headlamp Service Kit – PS	7	28805	2	Park/Turn Socket Service Kit
2	28803-1	2	Rear Cover Kit (fits 2- or 3-screw)	8		2	Park/Turn Bulb (trade no. 4157NAK)
3	28804	2	Mounting Hardware Kit	9	28806	2	Headlamp Bulb Service Kit H13
4	91105	2	1/2 Flat Washer	10	28808-1	2	Cover Screws Service Kit (pkg of 3)
5	66130	2	Rubber Grommet	11	28213W	1	Harness Service Kit
ns = not shown							

Western Products
PO Box 245038
Milwaukee, WI 53224-9538
www.westernplows.com

A DIVISION OF DOUGLAS DYNAMICS, LLC

Copyright © 2021 Douglas Dynamics, LLC. All rights reserved. This material may not be reproduced or copied, in whole or in part, in any printed, mechanical, electronic, film, or other distribution and storage media, without the written consent of Western Products. Authorization to photocopy items for internal or personal use by Western Products outlets or snowplow owner is granted.

Western Products reserves the right under its product improvement policy to change construction or design details and furnish equipment when so altered without reference to illustrations or specifications used. Western Products or the vehicle manufacturer may require or recommend optional equipment for snow removal. Do not exceed vehicle ratings with a snowplow. Western Products offers a limited warranty for all snowplows and accessories. See separately printed page for this important information. The following are registered (®) or unregistered (™) trademarks of Douglas Dynamics, LLC: MIDWEIGHT™, POLY PRO-PLOW® Series 2, PRO-PLOW® Series 2, SECURITY GUARD™, ULTRAFINISH™, UltraMount® 2, WESTERN®.

Printed in U.S.A.